Data Sheet | Skylight 500x700

DESCRIPTION
Skylight window with integrated black-out pleated blind and insect screen for rattle-free use and installation in roofs of recreational vehicles (RV's)

OPERATION
Secure (un)locking using 2 handles with integrated pushbuttons. Operation of gas strut supported roof hatch through an aluminium handle with 3 opening positions. Max. opening angle 80°. Stepless manual adjustment of the blind and insect screen. The pull bars lock together with an integrated magnet and are easily separable by hand.

DIMENSIONS

Cut-out hole	502 x 702 mm
Roof hatch	645 x 836 mm
Inner shell	580 x 780 mm

MATERIAL AND OTHER SPECIFICATIONS

Colour options
Standard cream, upon request white with minimum order quantity

Roof hatch
Double tinted UV-resistant acrylic glazing in accordance with European standard E32 43R

Frame
ASA

Permanent aeration
150 cm^3

Black-out fabric
Cream pleated fabric with invisible cords

Insect screen mesh
Black polyester mesh. Visible black cords through holes in the mesh

INSTALLATION
The construction height is 98 mm up from the roof and 32.7 mm down from the ceiling. See the drawing on the next page. Suitable for roof thicknesses 25-60 mm. Make a hole with R50 corners. Fixation with clips, plastic blocks, and screws.

CLEANING
A soft damp cloth with mild detergent

PACKAGING
Individual or in bulk with installation material

Taanderijstraat 19
3133 ET Vlaardingen
The Netherlands

Tel. +31 (0)10 2619600
E-mail info@horrex.nl
Website ww.horrex.nl

SPECIAL NOTE
Integrated 12V DC LED lights with switch can be installed upon request.

SKYLIGHT DIMENSIONS (MM)

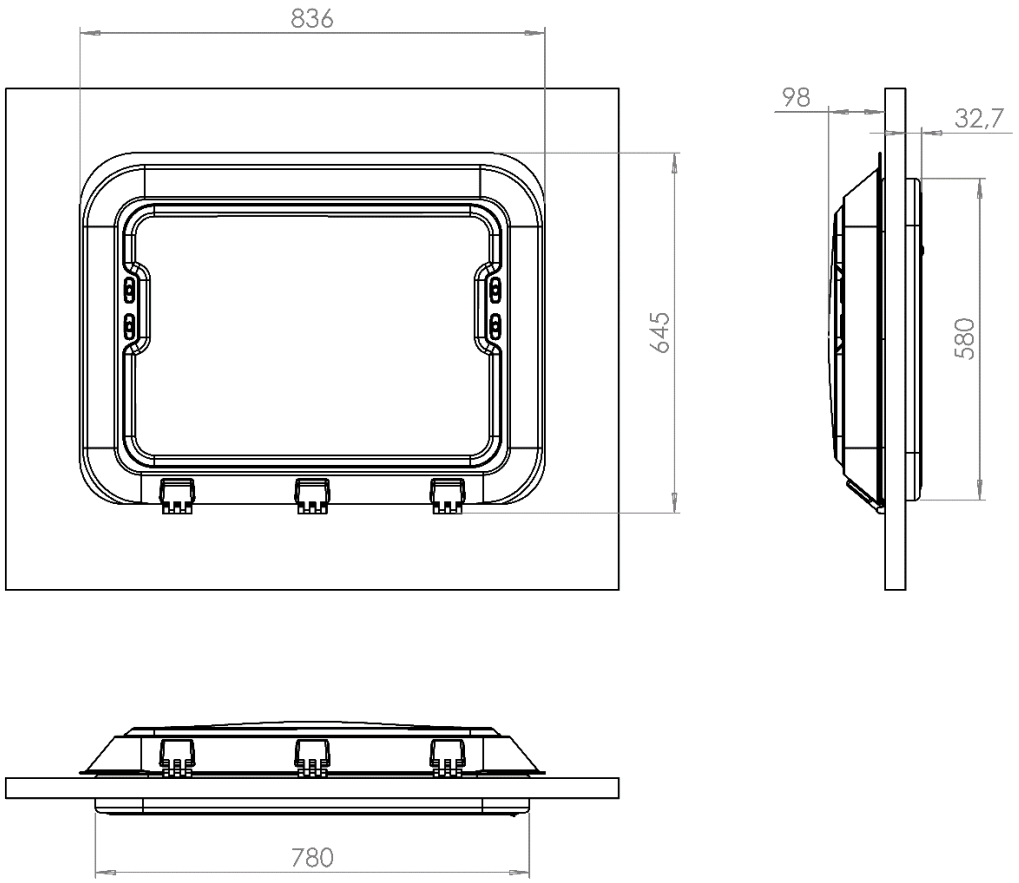

Disclaimer | The specifications in this data sheet are for information purposes only and may be subject to change without prior notice
© Horrex 2021

Taanderijstraat 19
3133 ET Vlaardingen
The Netherlands

Tel. +31 (0)10 2619600
E-mail info@horrex.nl
Website ww.horrex.nl